ANNOVIREVERBERI
CROPLANDS

AR 30

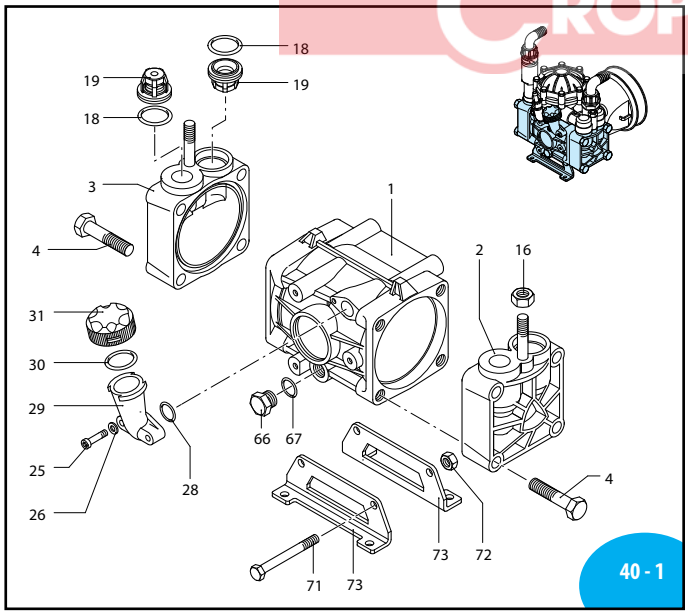

UN000352-DD

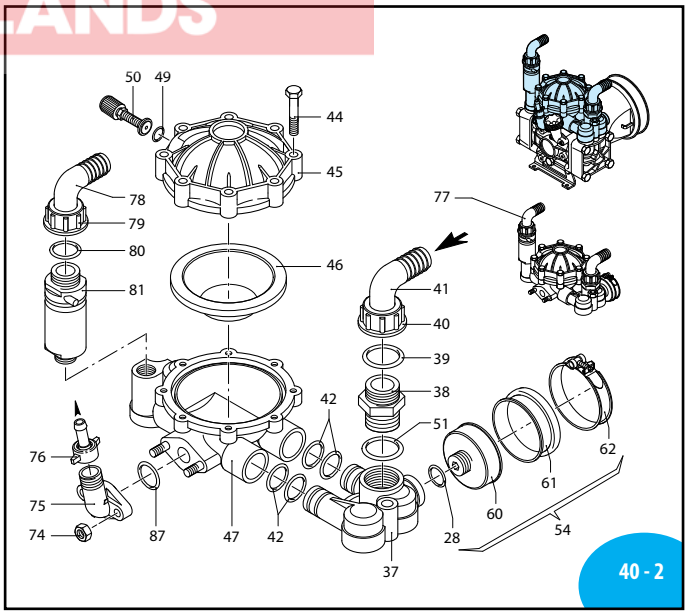

UN000353-DD

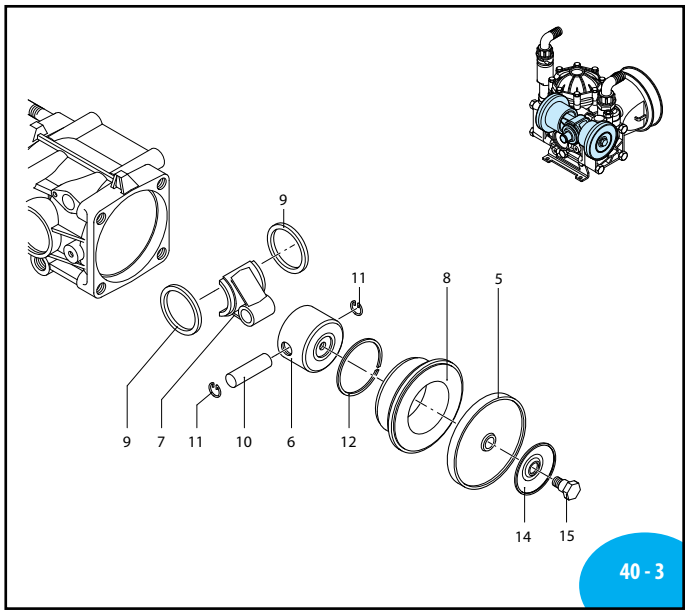

UN000354-DD

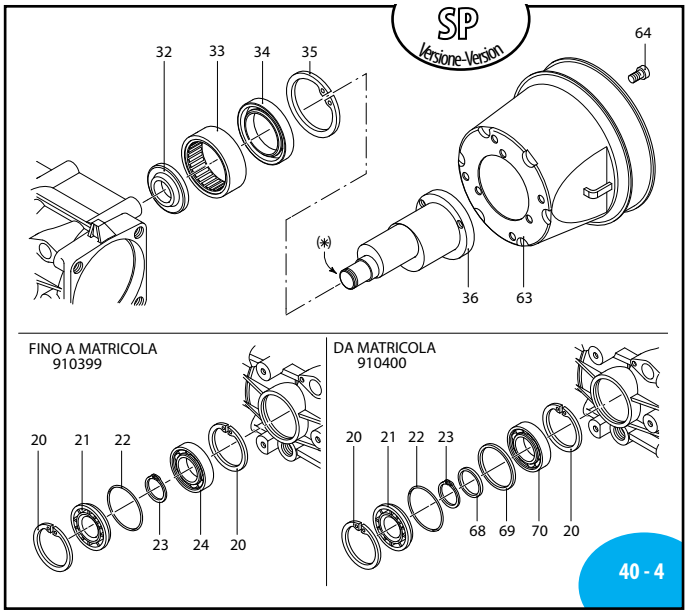

UN000355-LE

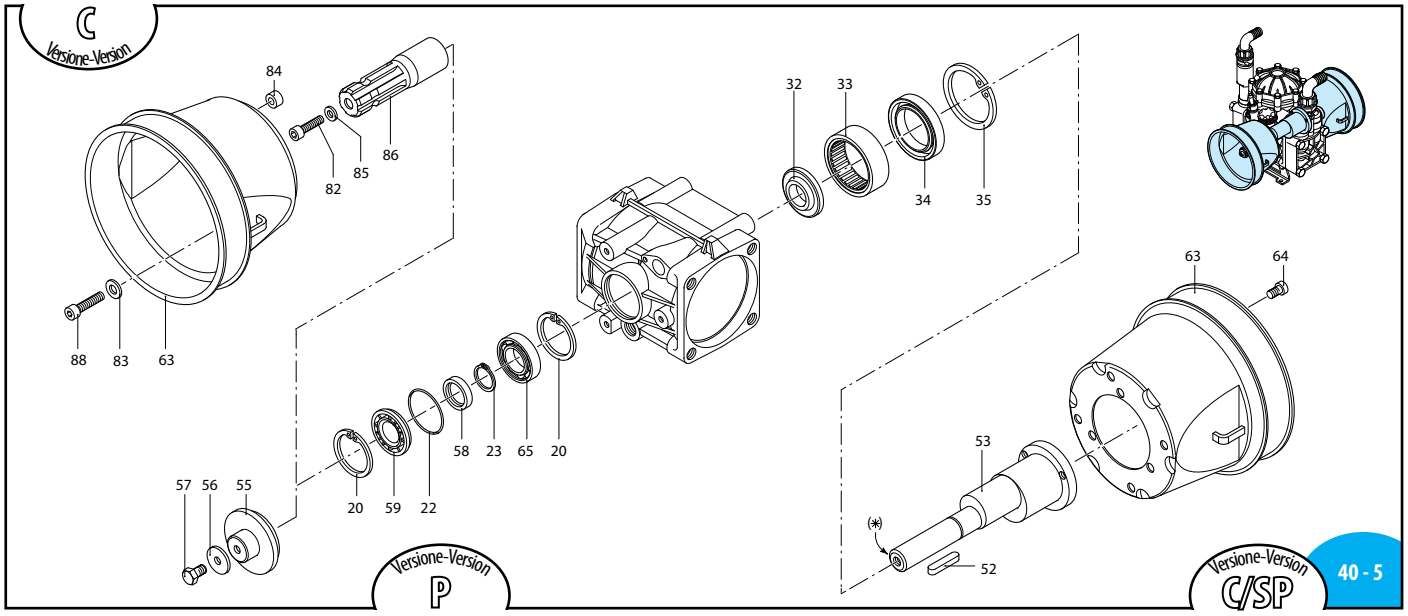

UN000356-DD

2011 Annovi Reverberi Spa

NOTE

PLEASE ADD PREFIX AR TO REFLECT CROPLANDS PART NUMBER

AR 30

NOTE

SOME PARTS ARE NON-STOCK ITEMS AND MAY NEED TO BE ORDERED

Pos.	Cod.	Descrizione	Description	Q.ty	Note
1	620011	Corpo pompa	Pump body	1	
2	620101	Testa DX	Right head	1	
3	620102	Testa SX	Left head	1	
4	621430	Vite TE M 12x55	Bolt	8	C 50
5	620080	Membrana	Diaphragm	2	Gomma
	620081	Membrana	Diaphragm	2	Viton
	620085	Membrana	Diaphragm	2	Desmopan
6	620120	Pistone	Piston	2	
7	620140	Biella	Connecting rod	2	
8	620110	Camicia	Sleeve	2	
9	580470	Anello biella	Con rod pin	2	
10	380300	Spinotto	Piston pin	2	
11	380080	Anellino spinotto	Pin ring	4	
12	160230	Segmento	Piston ring	2	
14	1040180	Piastra di richiamo	Plate	2	
15	580360	Perno membrana	Diaphragm pin	2	O C 20
16	180150	Dado M 10	Nut	2	
18	620030	OR ø 25,80x3,53	O-Ring	4	▶
	620031	OR ø 25,80x3,53	O-Ring	4	Viton
19	629050	Valvola completa	Complete valve	4	
20	111120	Anello seeger	Circlip	2	
21	620020	Coperchietto chiuso	Cover	1	
22	620210	OR ø 40,95x2,62	O-Ring	1	▶
23	620291	Anello seeger	Circlip	1	
24	620191	Cuscinetto	Bearing	1	
25	850850	Vite TCEI M 6x30	Bolt	2	C 10
26	550331	Rosetta øi 6,5	Washer	2	
28	180101	OR ø 17,5x2	O-Ring	2	▶
29	550030	Serbatoio olio	Oil tank	1	
30	550040	OR ø 26,65x2,62	O-Ring	1	▶
31	550050	Tappo serbatoio olio	Oil tank cap	1	
32	620160	Distanziale	Spacer	1	
33	550060	Boccola a rullini	Roller bushing	1	
34	620130	Anello tenuta	Seal ring	1	▶
35	620330	Anello seeger	Circlip	1	
36	620170	Albero eccentrico "SP"	"SP" shaft	1	(N)
37	620150	Attacco aspirazione	Suction manifold	1	
38	550340	Niples 1"G(M)-1"G(M)	Threaded adapter	1	
39	550350	OR ø 23,81x2,62	O-Ring	1	▶
40	550242	Girello 1" G	Ring nut	1	
41	550370	Curva ø 25	Elbow	1	
42	390060	OR ø 20,63x2,62	O-Ring	4	▶
44	621780	Vite TE M 8x40	Bolt	8	C 20
45	620230	Semisfera superiore	Upper air chamber	1	
46	550190	Semicamera aria	Semi air chamber	1	Gomma
	550191	Semicamera aria	Semi air chamber	1	Saturflon
	550192	Semicamera aria	Semi air chamber	1	Viton
47	620180	Semicamera inf.	Lower air chamber	1	

Pos.	Cod.	Descrizione	Description	Q.ty	Note
47	629209	Semicamera inf.compl.	Compl.lower air chamb.	1	Vedi / See ●
49	650542	Guarnizione	Gasket	1	▶
50	180020	Valvola di gonfiaggio	Air valve	1	
51	390290	OR ø 29x3	O-Ring	1	▶
52	620680	Linguetta	Key	1	Per / For 620172
53	620172	Albero passante "C/SP"	Through-shaft "C/SP"	1	ø 20 mm (P)
	620174	Albero passante "C/SP"	Through-shaft "C/SP"	1	ø 3/4" (R)
54	659209	Prem. membranina asp.	Suct. diaphragm assembly	1	
55	620661	Flangia	Flange	1	
56	620670	Rosetta øi 8,5	Washer	1	
57	180370	Vite TE M 8x25	Bolt	1	C 20
58	620630	Anello tenuta	Seal ring	1	
59	620021	Coperchietto passante	Cover	1	
60	650660	Porta membrana	Diaphragm holder	1	◪
61	650670	Membranina asp.	Suction diaphragm	1	
62	651670	Fascetta	Clamp	1	
63	1500350	Protezione cardano	Cardan protection	1	
64	820670	Vite TCEI M 10x16	Bolt	4	C 10
65	620190	Cuscinetto	Bearing	1	
66	880530	Tappo 3/8" G	Plug	1	C 20
67	740290	OR ø 14x1,78	O-Ring	1	▶
68	620930	Distanziale cuscinetto	Spacer	1	
69	620940	Distanziale cuscinetto	Spacer	1	
70	380230	Cuscinetto	Bearing	1	
71	380210	Vite TE M 8x75	Bolt	2	C 30
72	380240	Dado M 8	Nut	2	
73	380200	Piede	Base	2	
74	390270	Dado M 8	Nut	2	C 20
75	450145	Flangia raccordo	Flange	1	
76	110130	Racc.1/2" G+tub. ø13	Fitting 1/2" G+hose ø13	1	
77	1522	Camera aria completa	Complete air chamber	1	
78	550460	Curva ø 18	Elbow	1	
79	550450	Girello 3/4" G	Ring nut	1	
80	880831	OR ø 15,54x2,62	O-Ring	1	Viton ▶
81	1609001	Valvola di sicurezza	Safety valve	1	◓
82	680350	Vite TCEI M 8x35	Bolt	1	C 20
83	380241	Rosetta øi 8,5	Washer	3	
84	1200521	Distanziale	Spacer	3	
85	961340	Rosetta øi 8,5	Washer	1	
86	621370	Giunto	Universal joint	1	Per / For 620172
87	550350	OR ø 23,81x2,62	O-Ring	1	☒
88	680350	Vite TCEI M 8x35	Bolt	3	C 10

● Completa di tappo ed or per versioni senza valvola di sicurezza.
With plug and o-ring for version without safety valve.

Media Pressione
Medium Pressure

CI 0455MG

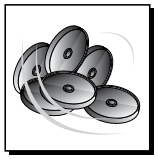

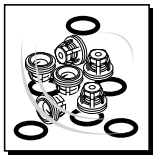

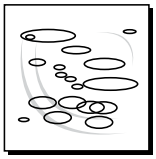

KIT 1930
Membrane gomma
Buna diaphragms

Pos.	Q.ty
5	
2	

KIT 1917
Valvole
Valves

Pos.	Q.ty
18	4
19	4

KIT 1916
OR
O-Rings

Pos.	Q.ty
18	4
22	1
28	2
39	2
42	4
49	1
51	1
67	1

KIT 1915
Pronto intervento
Mantenance repair

Pos.	Q.ty	Pos.	Q.ty	Pos.	Q.ty
5	2	40	1		
13	1	41	1		
14	1	42	4		
15	1	46	1		
18	4	49	1		
19	4	51	1		
22	1	61	1		
28	2	67	1		
29	1				
39	2				

Olio utilizzato
Used oil

Tipo - Type	Kg
SAE 30	0,7

ARGI40

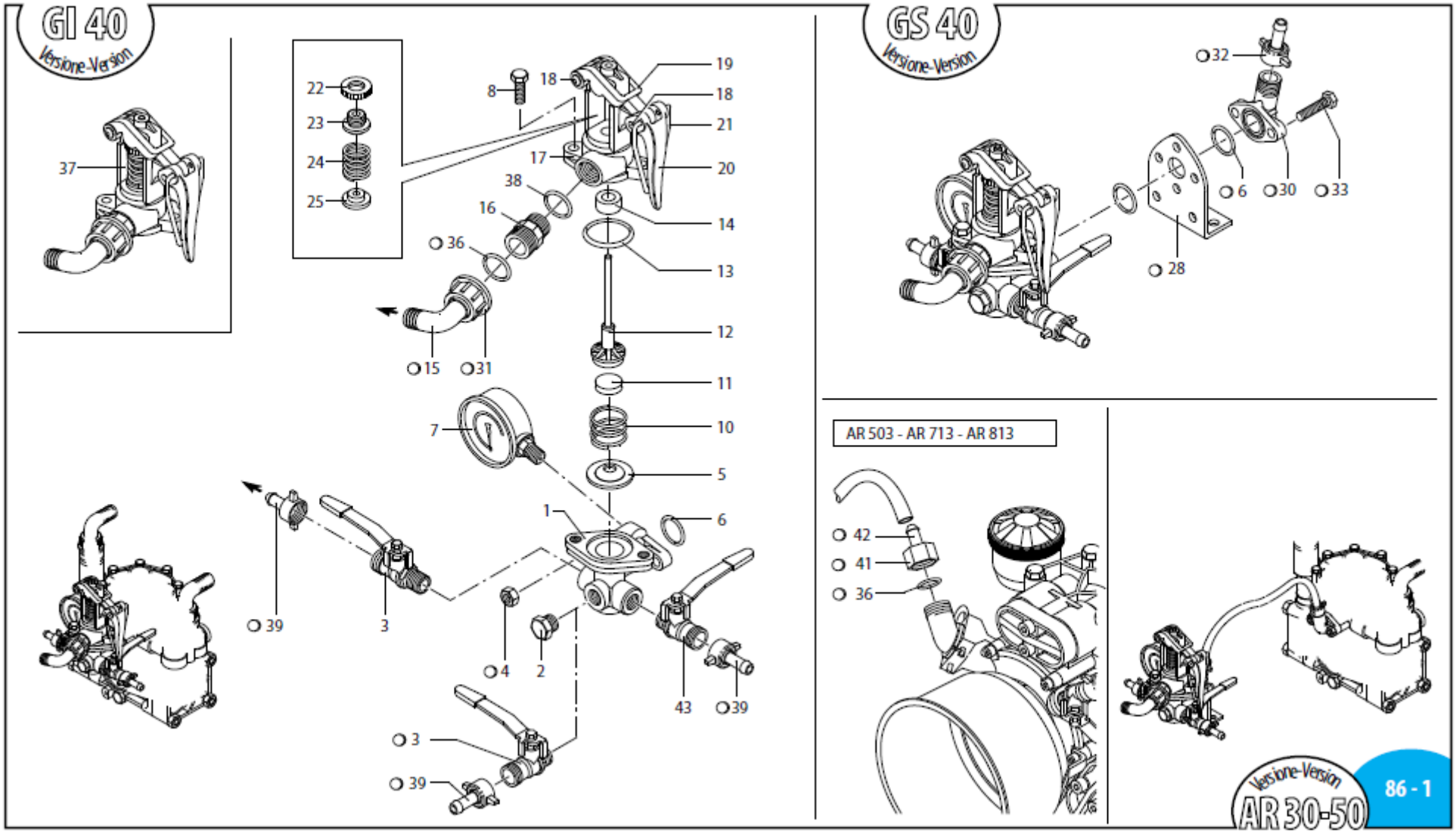

*Specifications subject to change without notice

CROPLANDS

Pos.	Cod.	Descrizione	Description	Q.ty	Note
1	620220	Gruppo comando	Control unit	1	
2	130171	Tappo 3/8"G	Plug	1	ex 30171 ◔ C 20
3	130491	Rub. 3/8"-1/2" G (M) DX	Right valve	2	ex 30491 ◔
4	390270	Dado M 8	Nut	2	C 20
5	450110	Sede valvola	Valve seat	1	
6	550350	OR ø 23,81x2,62	O-Ring	2	
7	550545	Manometro ø 63	Pressure gauge	1	0-80 bar ◔
8	180370	Vite TE M 8x25	Bold	2	C 20
10	320420	Molla castello	Spring	1	
11	110121	Pastiglia	Valve seat	1	Vulkolan
	110120	Pastiglia	Valve seat	1	Gomma
	110122	Pastiglia	Valve seat	1	Viton
12	320433	Funghetto completo	Stem	1	
13	320511	OR ø 37,8x4 ovalizzato	O-Ring	1	
14	390140	Guarnizione	Gasket	1	
	390141	Guarnizione	Gasket	1	Viton
15	550460	Curva ø 18	Elbow	1	
16	550440	Niples 1/2"-3/4"G(M)	Threaded adapter	1	
17	320410	Castello valvola	Body valve	1	
18	320480	Perno forcella	Pin	2	
19	320460	Forcella	Fork	1	
20	320470	Leva comando	Lever	1	
21	320490	Tirante	Locking clip lever	1	
22	320450	Piattello registro	Plate register	1	
23	320440	Registro valvola	Valve register	1	
24	110190	Molla	Spring	1	
25	230120	Piattello guida molla	Plate	1	
28	320406	Staffa GS	Bracket	1	
30	450145	Flangia raccordo	Flange	1	
31	550450	Girello 3/4" G	Ring nut	1	
32	110130	Racc.1/2" G+tub. ø13	Fitting 1/2" G+hose ø13	1	ex 10130
33	160660	Vite TE M 8x35	Bolt	2	C 10
36	880830	OR ø 15,54x2,62	O-Ring	2	
37	1923	Valvola regolazione	Regulating valve	1	
38	180101	OR ø 17,5x2	O-Ring	1	
39	110131	Racc.1/2"G+tub. ø10	Fitting 1/2" G+hose ø10	3	ex 10131
41	1040790	Girello raccordo 3/4" G	Ring nut	1	
42	1150580	Portagomma ø 13	Hose tail	1	

Pos.	Cod.	Descrizione	Description	Q.ty	Note
43	130492	Rub. 3/8"-1/2" G (M) SX	Left valve	1	ex 30492 ◔

○ Non compreso nel GI 40 - No part of GI 40

KIT 1921
Pastiglie gomma
Buna valve seats

Pos.	Q.ty
11	
5	

KIT 1922
Pastiglie Vulkolan
Vulkolan valve seats

Pos.	Q.ty
11	
5	

KIT 1925
Pronto intervento
Mantenance repair

Pos.	Q.ty	Pos.	Q.ty
5	1		
10	1		
11	1		
12	1		
13	1		
14	1		

*Specifications subject to change without notice

Kit per/for GI 40

KIT 977 "I"

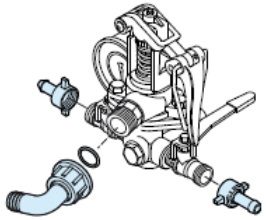

SL000114GY

KIT 980 "S"

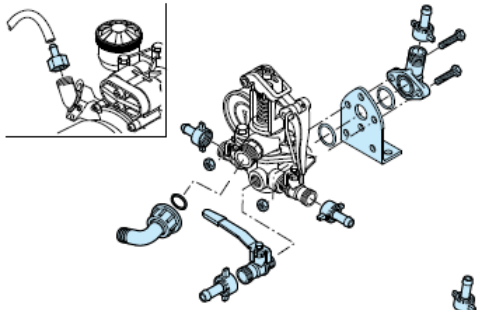

KIT 982 "S"

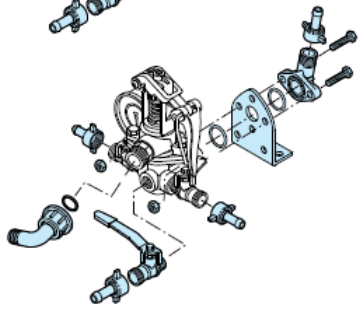

SL000027KA

Comando incorporato e separato - Build-in control unit and remote control

KIT 977 "I"
Comando incorporato
Build in control

Pos.	Q.ty	Pos.	Q.ty
15	1		
31	1		
36	1		
39	2		

Per / for AR 30 - AR 50 - AR 303 - AR 403

KIT 980 "S"
Comando separato
Remote control

Pos.	Q.ty	Pos.	Q.ty
3	2		
4	2		
6	2		
15	1		
28	1		
30	1		
32	1		
33	2		
36	2		
39	3		

Per / for AR 30 - AR 50 - AR 303 - AR 403

KIT 982 "S"
Comando separato
Remote control

Pos.	Q.ty	Pos.	Q.ty
3	2	41	1
4	2	42	1
6	2		
15	1		
28	1		
30	1		
32	1		
33	2		
36	2		
39	3		

Per / for AR 503

NOTE

SOME PARTS ARE NON-STOCK ITEMS AND MAY NEED TO BE ORDERED

NOTE

PLEASE ADD PREFIX AR TO REFLECT CROPLANDS PART NUMBER

*Specifications subject to change without notice

AR30-EM	Single phase 3 HP or 2.2 Kw Motor base only Complete with Switch, Cable and Plug Dimensions (cm) 67 x 40 x 37 **ARGI40** Controller attached Maximum Pressure 35 bar
AR30-ET	Three phase 3 HP or 2.2 Kw Motor base only Complete with Switch, Cable and Plug Dimensions (cm) 67 x 40 x 37 **ARGI40** Controller attached Maximum Pressure 35 bar

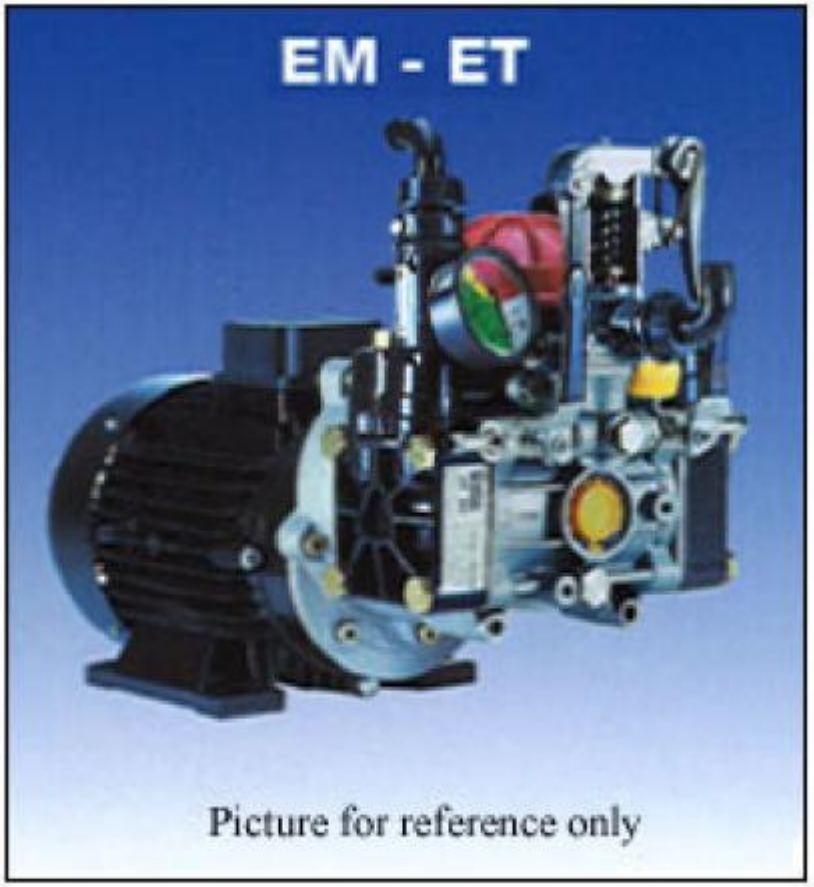

*Specifications subject to change without notice

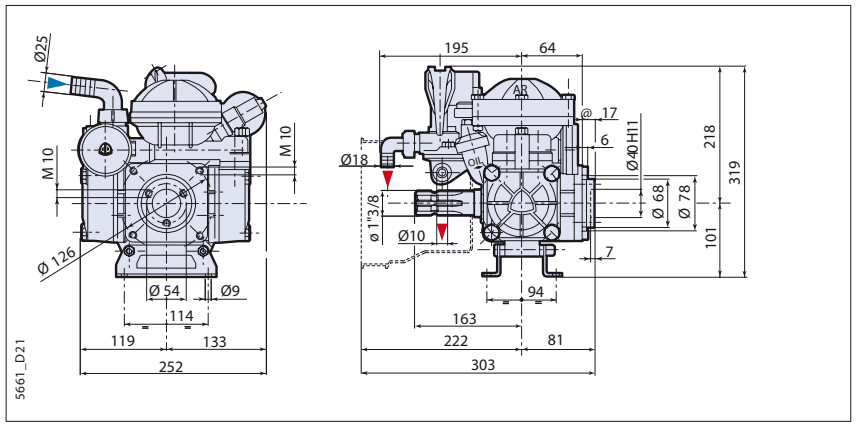

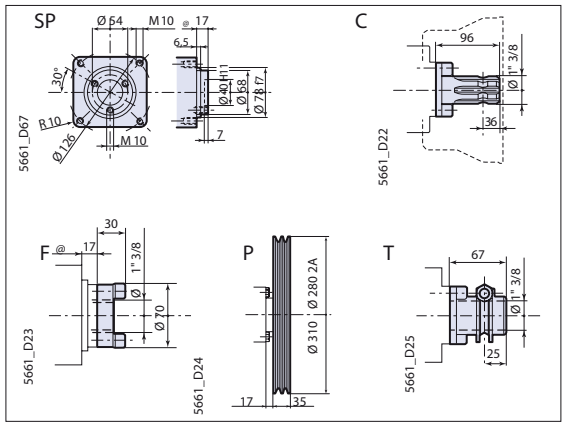

AR 30

DIMENSIONS • DIMENSIONI

AR 30

Pumps
Pompe

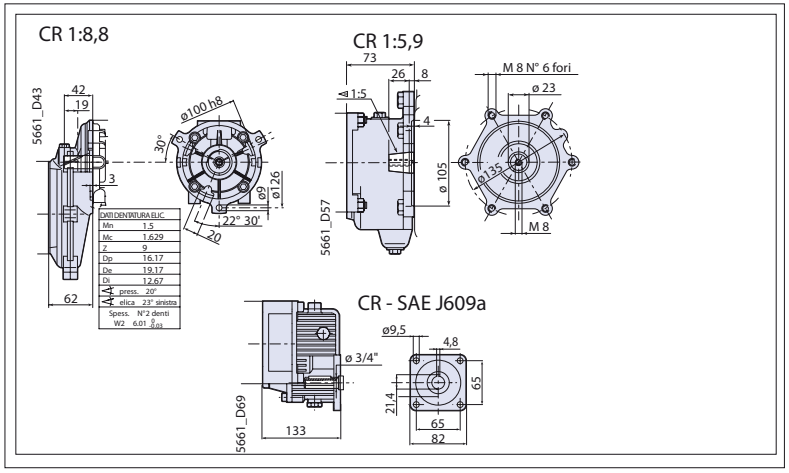

Please note: specifications are subject to change for improvement without notice.

© Apr 2007 by AnnoviReverberi spa

Dati, descrizioni ed illustrazioni sono forniti a titolo indicativo e non impegnativo. • Characteristics and descriptions are not binding. • Données, descriptions et illustrations sont fournis titre indicatif et pas qui engage. • Jegliche in diesem Katalog enthaltene Daten, Beschreibungen sind unverbindlich. • Datos, descripciões y ilustraciões son proveedos a tiulo indicativo y non empenatido.