ANNOVIREVERBERI
CROPLANDS

AR 503

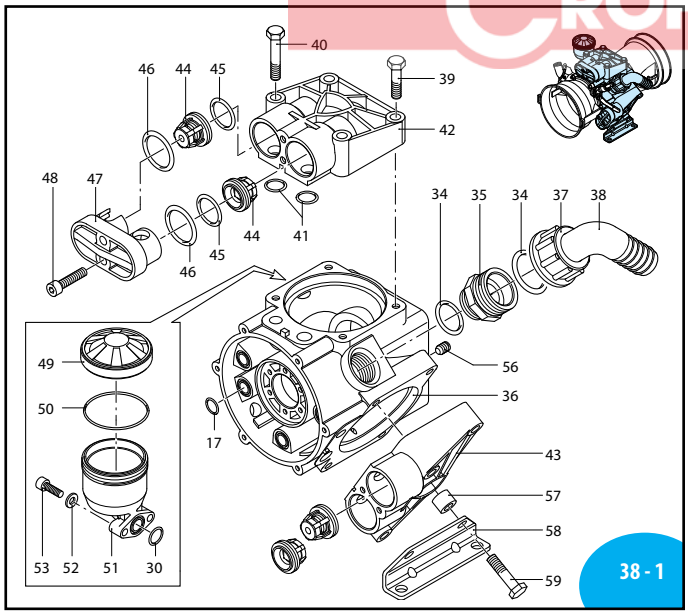

UN970058-DD

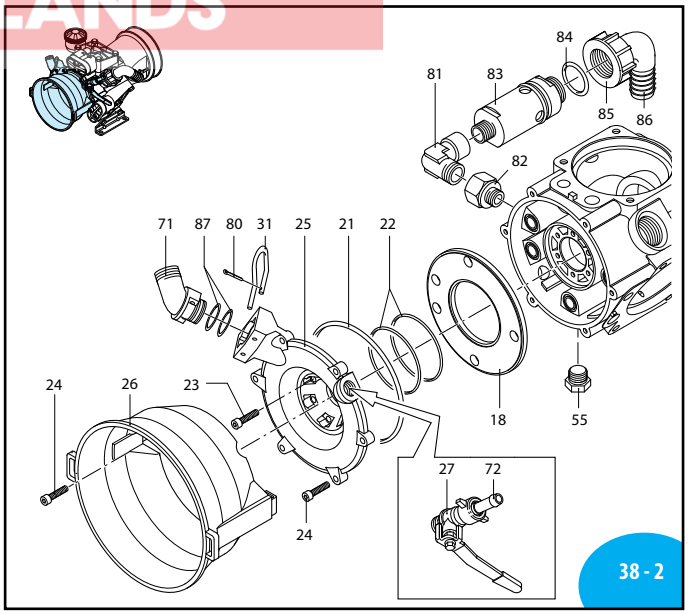

UN970059-LJ

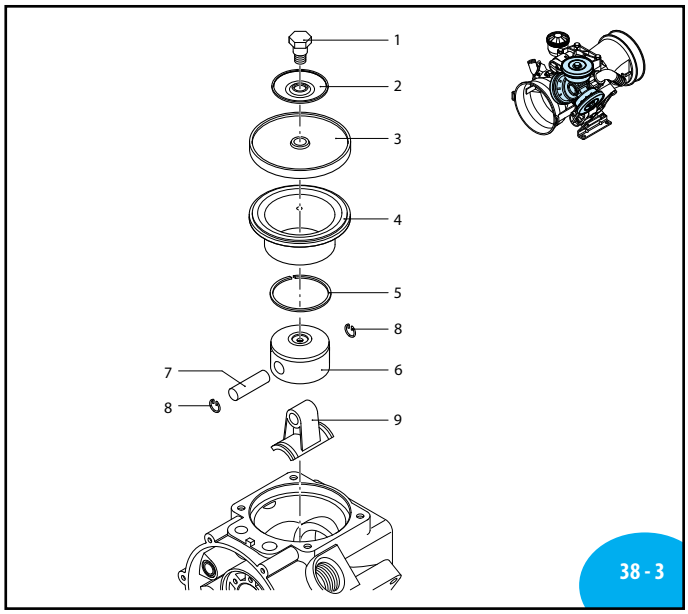

UN970062-LJ

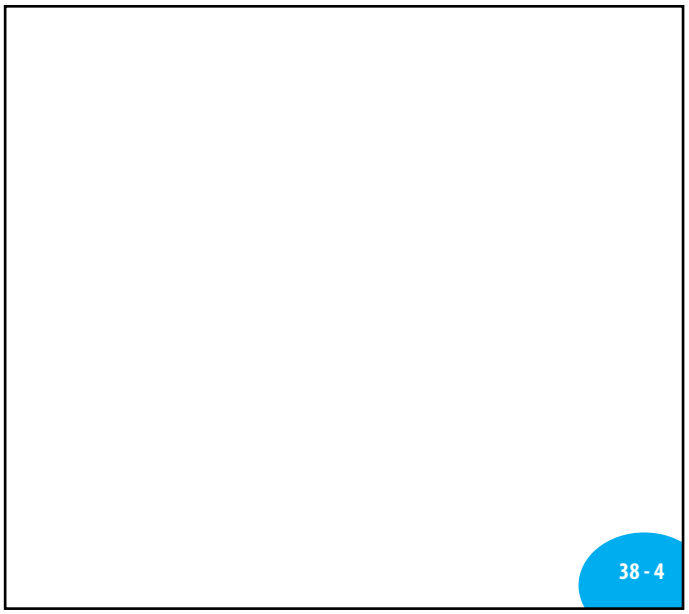

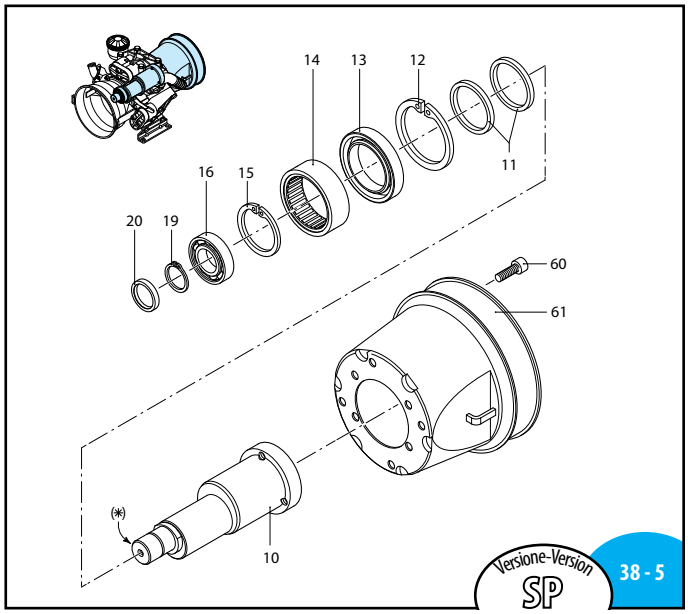

UN970060-LE

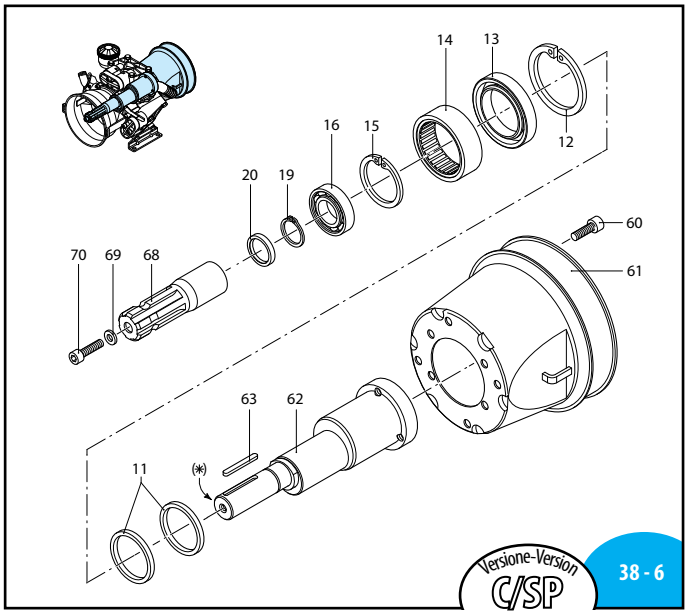

UN970061-LE

AR 503

Pos.	Cod.	Descrizione	Description	Q.ty	Note
1	580360	Perno membrana	Diaphragm pin	3	○ C 30
2	1040180	Piastra di richiamo	Plate	3	
3	620080	Membrana	Diaphragm	3	Gomma
	620081	Membrana	Diaphragm	3	Viton
	620085	Membrana	Diaphragm	3	Desmopan
4	1300110	Camicia	Sleeve	3	
5	160230	Segmento elastico	Piston ring	3	
6	620120	Pistone	Piston	3	
7	380300	Spinotto	Piston pin	3	
8	380080	Anellino spinotto	Pin ring	6	
9	1300140	Biella	Connecting rod	3	
10	1300170	Albero universale"SP"	"SP" shaft	1	(Z)
11	1300120	Anello biella	Con rod ring	2	
12	1300240	Anello seeger	Circlip	1	
13	1300220	Anello tenuta	Seal ring	1	▶
14	1300210	Astuccio a rullini	Roller bearing	1	
15	1260790	Anello seeger	Circlip	1	
16	180400	Cuscinetto	Bearing	1	
17	740291	OR ø 14x1,78	O-Ring	5	Viton ▶
18	1300020	Separatore condotti	Manifold plate	1	
19	1300050	Anello seeger	Circlip	1	
20	1300230	Anello tenuta	Seal ring	1	▶
21	1300270	OR ø 126,67x2,62	O-Ring	1	
22	640030	OR ø 60x2,62	O-Ring	2	
23	880280	Vite TCEI M 6x18	Bolt	6	C 10
24	1040370	Vite TCEI M 6x22	Bolt	6	C 10
25	1300030	Condotto mandata	Manifold	1	
26	1500130	Protezione cardano	Cardan protection	1	
27	130491	Rub. 3/8"-1/2" G (M) DX	Right valve	1	ex 30491 ⊕
30	390180	OR ø 18,72x2,62	O-Ring	1	▶
31	1040690	Forcella	Fork	1	
34	390290	OR ø 29x3	O-Ring	2	▶
35	450120	Niples 1"-1"1/4 G (M)	Threaded adapter	1	
36	1300010	Corpo pompa	Pump body	1	
37	580060	Girello 1"1/4 G	Ring nut	1	
38	580040	Curva ø 30	Elbow	1	
39	200230	Vite TE M 10x45	Bolt	4	C 45
40	640230	Vite TE M 10x60	Bolt	4	C 45
41	480441	OR ø 17,13x2,62	O-Ring	6	Viton ▶
42	1300101	Testa DX	Right head	2	
43	1300102	Testa SX	Left head	1	
44	1409050	Valvola completa	Complete valve	6	
45	620030	OR ø 25,80x3,53	O-Ring	6	▶
	620031	OR ø 25,80x3,53	O-Ring	6	Viton ▶
46	540361	OR ø 33,05x1,78	O-Ring	6	▶
47	1300190	Tappo valvola	Valve cap	3	
48	620610	Vite TCEI M 8x30	Bolt	6	C 20
49	1040322	Tappo serbatoio nero	Black oil tank cap	1	

Pos.	Cod.	Descrizione	Description	Q.ty	Note
50	650920	OR ø 53,65x2,62	O-Ring	1	▶
51	1040310	Serbatoio olio	Oil tank	1	
52	550331	Rosetta øi 6,5	Washer	2	
53	850850	Vite TCEI M 6x30	Bolt	2	C 10
55	880530	Tappo 3/8" G	Plug	1	⊕ C 20
56	770070	Grano M 10x10	Dowel	1	⊕ C 10
57	1300280	Distanziale piede	Spacer	2	
58	1300090	Piede	Base	2	
59	1300360	Vite TE M 10x65	Bolt	4	C 45
60	820670	Vite TCEI M 10x16	Bolt	4	C 10
61	1500350	Protezione cardano	Cardan protection	1	
62	1300160	Albero passante	Through-shaft	1	Per/For "C/SP" (K)
63	650250	Linguetta	Key	1	
68	650300	Giunto cardano	Universal joint	1	
69	961340	Rosetta øi 8,5	Washer	1	
70	680350	Vite TCEI M 8x35	Bolt	1	C 20
71	1040760	Attacco 3/4" G	Coupling	1	
72	110131	Racc.1/2"G+tub. ø10	Fitting 1/2" G+hose ø10	2	
80	1040950	Copiglia	Split pin	1	
81	881560	Gomito 90° 1/2" G (M)-(F)	Elbow	1	⊞
82	881461	Manic. 3/8"-1/2" G (M)-(F)	Threaded adapter	1	⊞
83	1609001	Valvola di sicurezza	Safety valve	1	■
84	880831	OR ø 15,54x2,62	O-Ring	1	▶
85	550450	Girello 3/4" G	Ring nut	1	
86	550460	Curva ø 18	Elbow	1	
87	390180	OR ø 18,72x2,62	O-Ring	2	⊠

Media Pressione
Medium Pressure

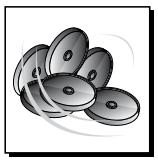

KIT 1986
Membrane gomma
Buna diaphragms

Pos.	Q.ty
3	3

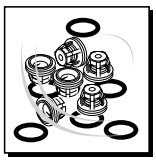

KIT 1987
Valvole
Valves

Pos.	Q.ty
44	6
45	6
46	6

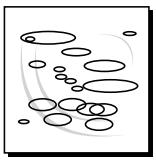

KIT 1984
OR
O-Rings

Pos.	Q.ty
17	6
21	1
22	2
30	3
34	2
41	6
45	6
46	6
50	1

KIT 1985
Pronto intervento
Mantenance repair

Pos.	Q.ty	Pos.	Q.ty	Pos.	Q.ty
1	3	37	1		
3	3	38	1		
13	1	41	6		
17	6	44	6		
20	1	45	6		
21	1	46	6		
22	2	47	3		
30	3	49	1		
31	1	51	1		
34	2	80	1		

Olio utilizzato
Used oil

Tipo - Type	Kg
SAE 30	0,6

NOTE

SOME PARTS ARE NON-STOCK ITEMS AND MAY NEED TO BE ORDERED

NOTE

PLEASE ADD PREFIX AR TO REFLECT CROPLANDS PART NUMBER
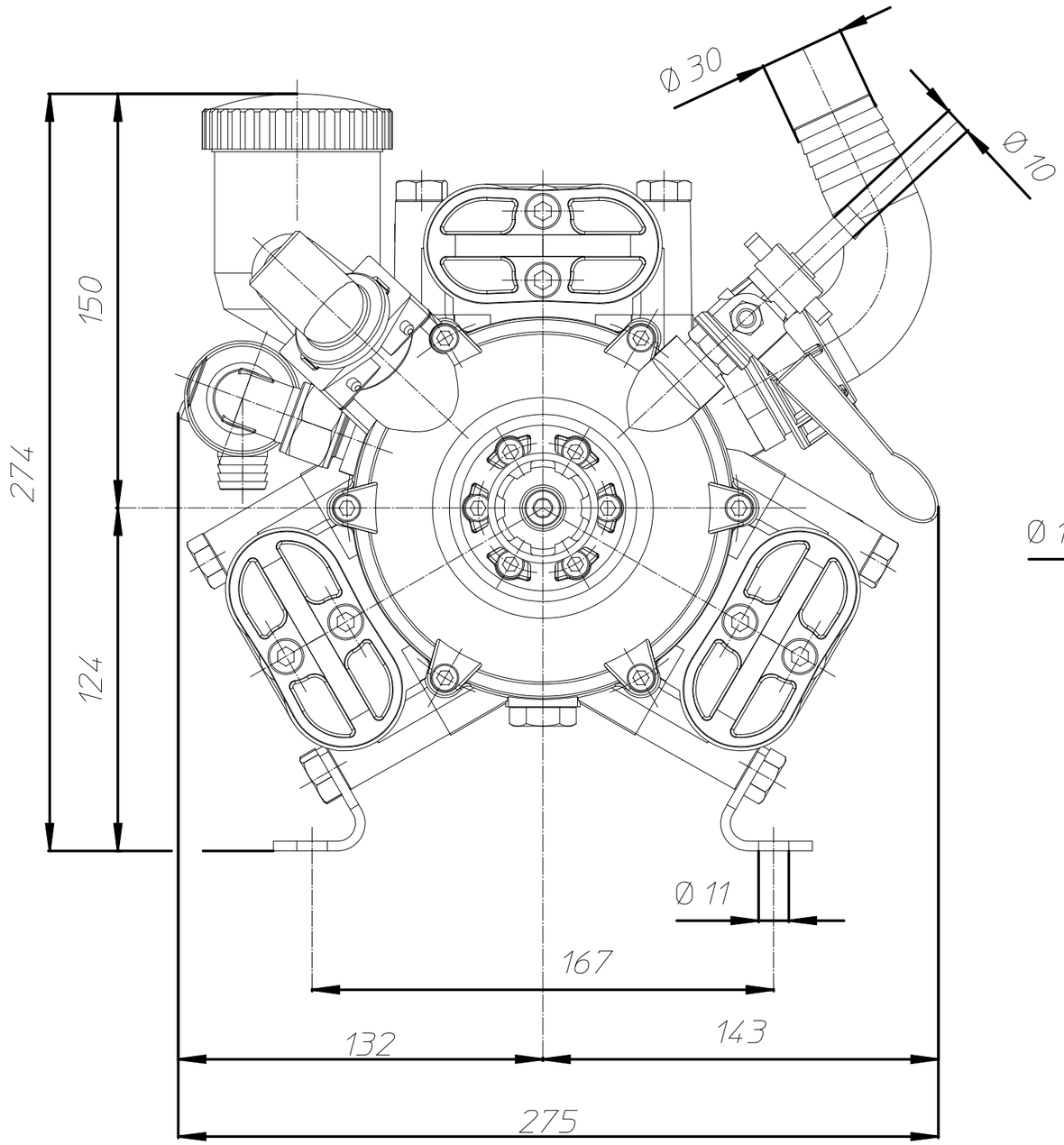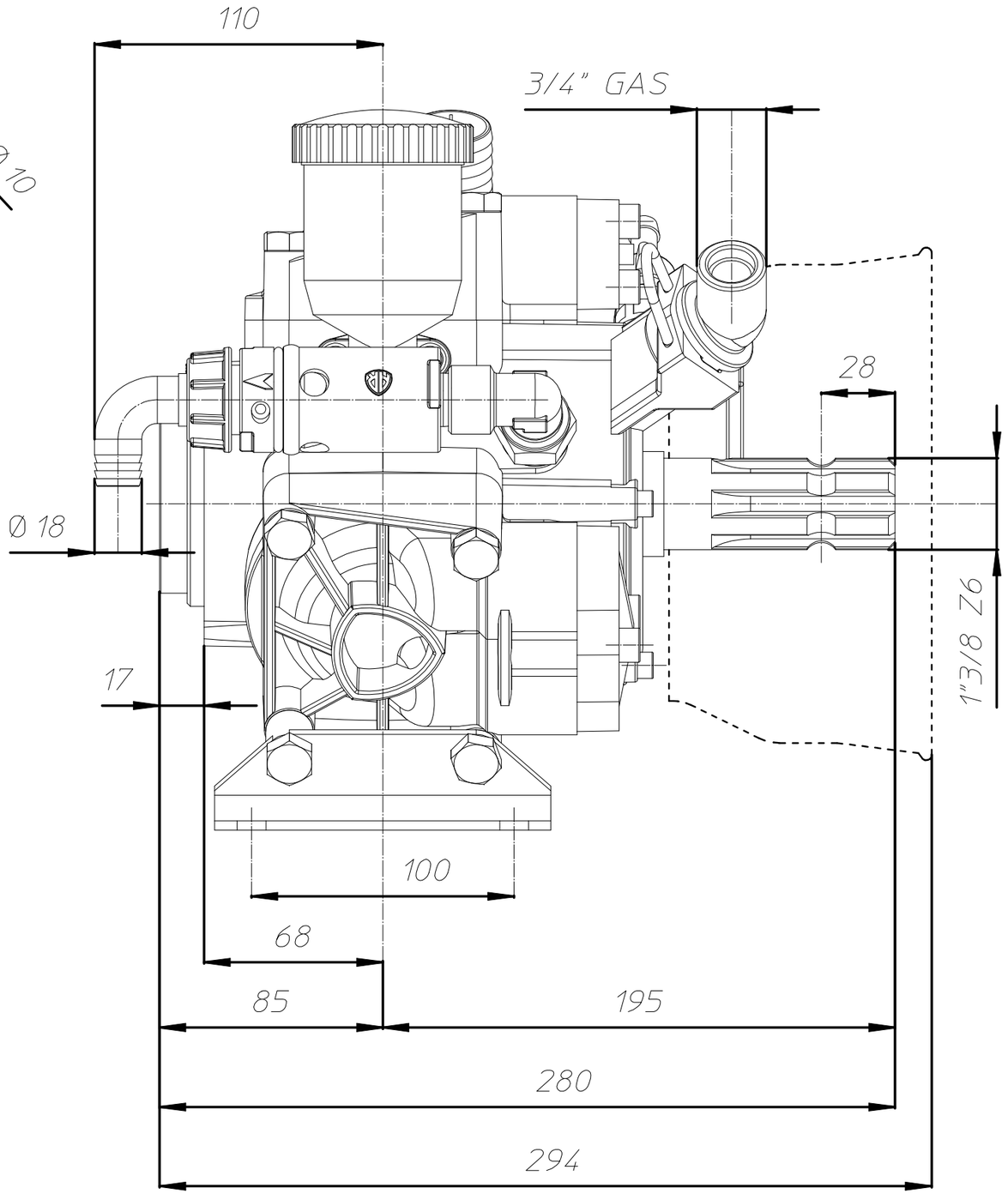
maagri 12-Apr-2011